THIS DRAWING IS UNPUBLISHED. RELEASED FOR PUBLICATION DEC ,2004.
© COPYRIGHT 2004 BY TYCO ELECTRONICS CORPORATION. ALL RIGHTS RESERVED.

LOC	DIST
E	B

REVISIONS

P	LTR	DESCRIPTION	DATE	DWN	APVD
	B1	ECO-10-021614	20OCT10	TitongSeng	

NOTES

1. SINGLE PACK IN ACCORDANCE WITH AMP SPEC 107-3275
2. 50 TRAY PACK IN ACCORDANCE WITH AMP SPEC 107-3275
3. Au PLATING OVER Cu PLATING
4. Ag PLATING OVER Cu PLATING
5. Ni PLATING OVER Cu PLATING
6. CHARACTERISTICS
   - FREQUENCY RANGE: DC-11.0GHz
   - IMPEDANCE: 50 OHMS
   - WORKING VOLTAGE: 1000V MAX AT SEA LEVEL
   - DIELECTRIC WITHSTAND VOLTAGE: 2500V RMS MAX
   - TEMPERATURE RATE: -55°C TO +165°C
7. MECHANICAL CHARACTERISTICS
   - DURABILITY: 500 CYCLES MIN
8. FOR TECHNICAL DATA REFER TO YOUR LOCAL TYCO ELECTRONICS SALES OFFICE
9. ALL DIMENSIONS ARE NOMINAL FOR REFERENCE ONLY UNLESS OTHERWISE STATED

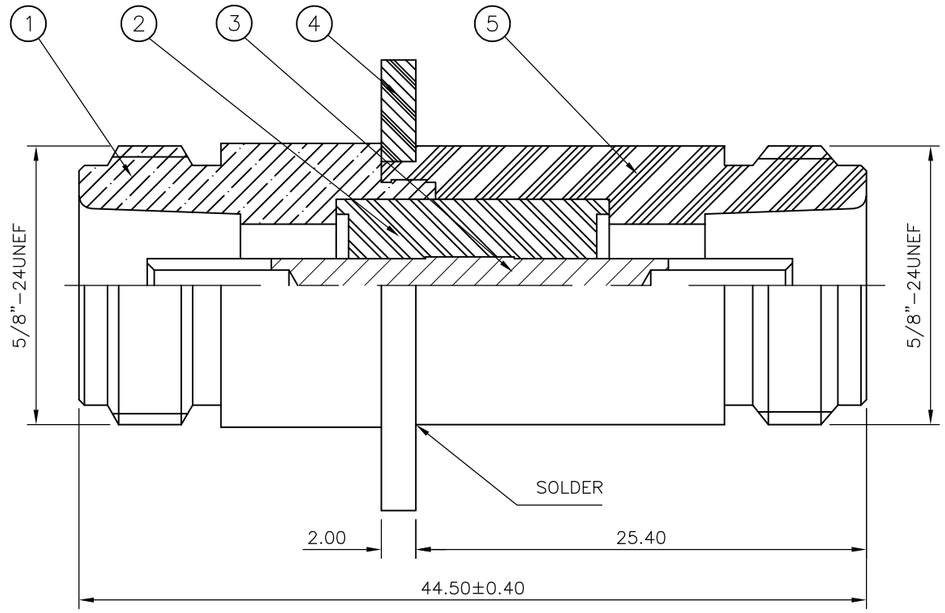

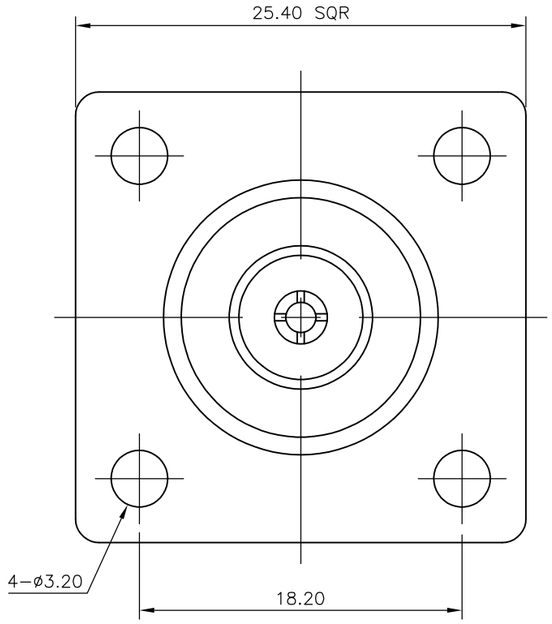

				–	–	1	1	BRASS 5	BODY	5
				1	1	–	–	BRASS 4	BODY	5
				–	–	1	1	BRASS 5	FLANGE	4
				1	1	–	–	BRASS 4	FLANGE	4
				1	1	–	–	BRASS 4	CONTACT	3
				–	–	1	1	BRASS 3	CONTACT	3
				1	1	1	1	PTFE	INSULATOR	2
				–	–	1	1	BRASS 5	BODY	1
				1	1	–	–	BRASS 4	BODY	1
				6--1	1--1	6--0	1--0	MATERIAL	DESCRIPTION	ITEM
				2	1	2	1			
QUANTITY PER ASSY								PARTS LIST		

THIS DRAWING IS A CONTROLLED DOCUMENT.

DIMENSIONS: mm

TOLERANCES UNLESS OTHERWISE SPECIFIED:
0 PLC ± –
1 PLC ± –
2 PLC ± –
3 PLC ± –
4 PLC ± –
ANGLES ± –

MATERIAL: SEE TABLE

FINISH: SEE TABLE

DWN J.SANDWELL 01DEC04
CHK S.PARLOW 01DEC04
APVD F.WHEELER-KING 01DEC04
PRODUCT SPEC —
APPLICATION SPEC —
WEIGHT —

Tyco Electronics

Tyco Electronics Corporation
Bideford, UK, EX39 4HE

NAME: N TYPE ADAPTER PANEL MOUNT JACK
—
—

SIZE	CAGE CODE	DRAWING NO	RESTRICTED TO
A3	00779	C-1814407	—

CUSTOMER DRAWING

SCALE NTS | SHEET 1 OF 1 | REV B1